SPECTra: Scalable Reinforcement Learning with Permutation-Free Networks

Presented by Rishabh Indoria

Core Scalability Challenges

- State Space Explosion: n agents create O(n!) observation permutation
- Computation Bottleneck: Self-attention scales as O(n^2d)
- Fixed Architecture: Traditional architecture require retraining for different agent counts
- Fails in dynamic systems, and limits transfer learning across scenarios

12:09
RBA 0
FRQ 0

Single Agent Query Attention

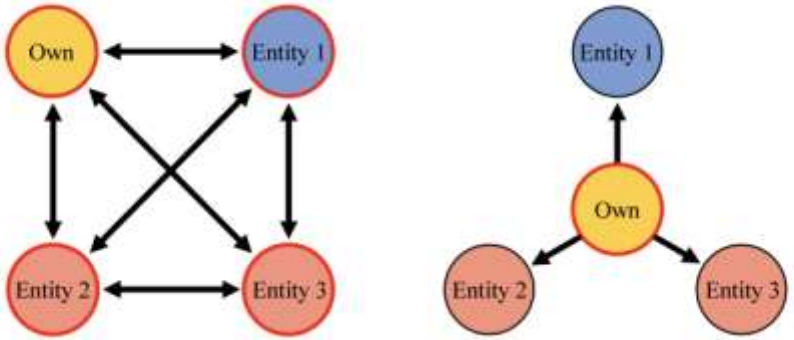

(a) Self-attention (b) SAQA (ours)

Figure 2: Comparison of connection density between self-attention and single-agent query attention.

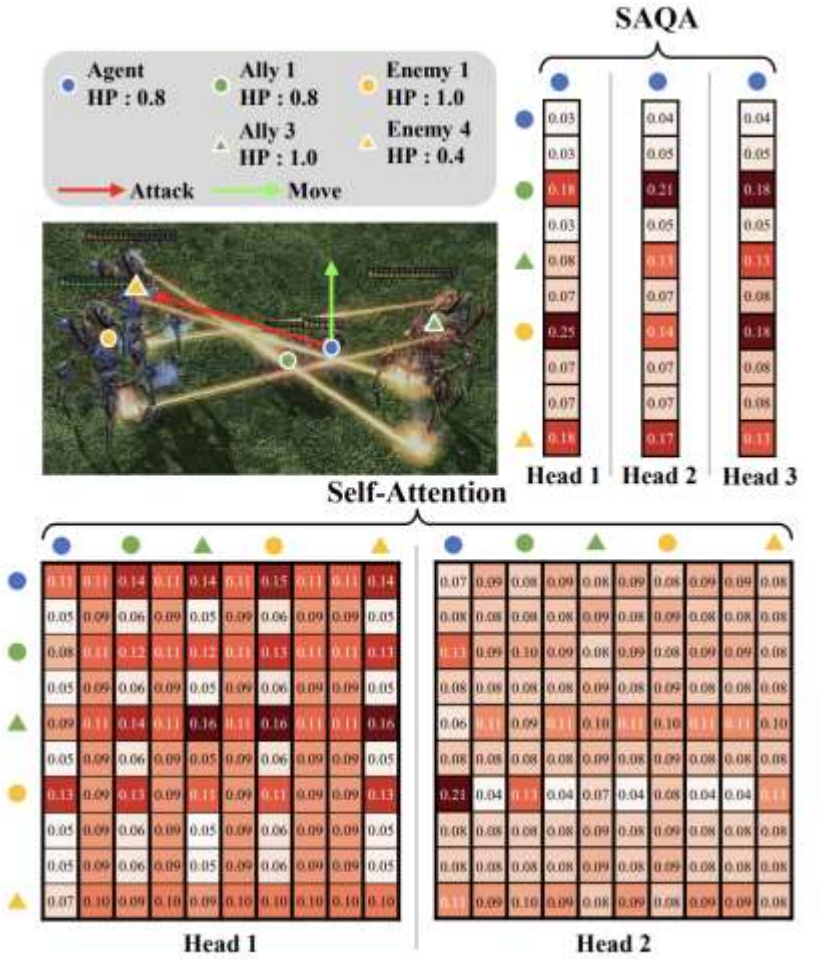

Figure 9: Example of attention maps computed from SAQA and self-attention layers (UPDeT) in SMACv2 environment.

Architecture

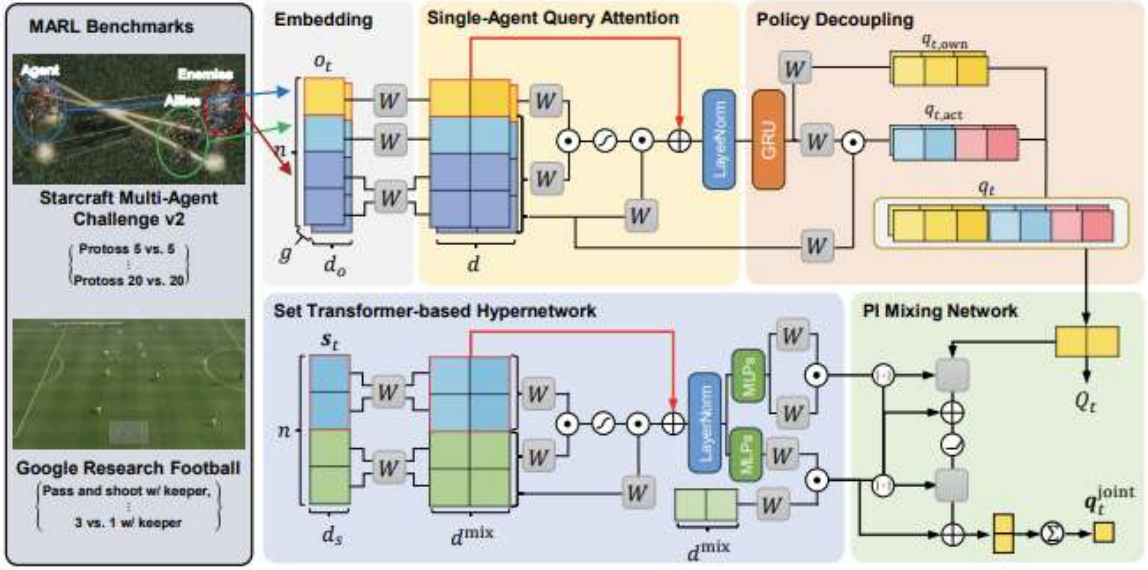

Figure 1: Overview of the proposed SPECTra framework. Gray boxes represent linear layers.

Training Efficiency

- Curriculum Learning: Increase complexity sequentially
- CTDE Framework: Centralized Training - Decentralized Execution
- Shared Parameter across all agents

Conclusion

- Solved permutation and scalability simultaneously
- Allows dynamic adaptation, live agent addition/removal
- Run on resource constrained devices?
- Zero shot performance in unseen configs?

Thank You

For your attention